SIGMA LT Load Banks
(3010, 3010R, 3020, 3020R, 3040, 3040R)

User Manual

Revision Number: 5039 - V2.4
Revision Date: Jan 2024

SIGMA LT Load Banks (3010, 3010R, 3020, 3020R, 3040, 3040R)

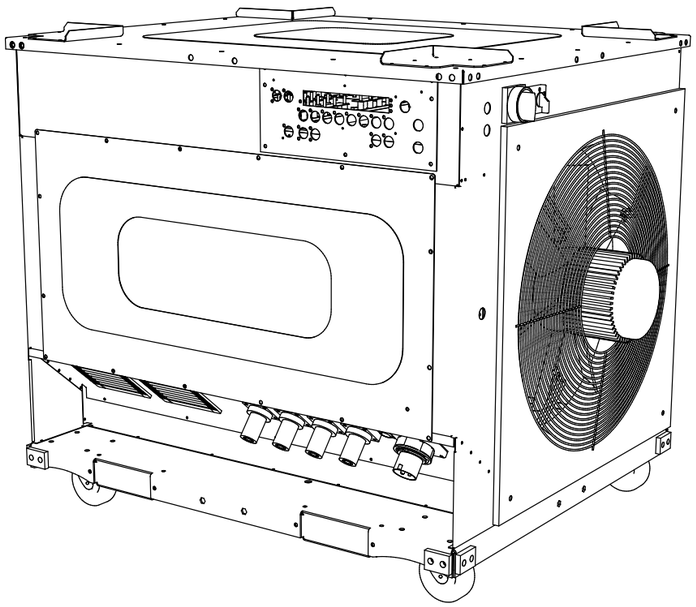

Avtron SIGMA LT load banks are manufactured in the UK by:

N J FROMENT & COMPANY LIMITED,
Easton-on-the-Hill,
STAMFORD,
PE9 3NP,
United Kingdom
Tel: +44 (0)1780 920 100
Web: www.avtronpower.com

Introduction

This manual should provide you with all the information that you need to safely setup and operate Avtron SIGMA LT load banks.

The manual is divided into five chapters:

Chapter One provides an introduction to the general principles of power supply testing and explains how a Avtron load bank makes the process easier, safer and more reliable. It then provides an introduction to SIGMA LT load banks and its main features.

Chapter Two covers all of the procedures that need to be carried out before a load bank can be put into operation. It explains how to transport and setup the unit safely and then how to commission it to check that it will operate correctly.

Chapter Three provides an overview and instructions on correct operation of a SIGMA LT load bank using the digital toggle switches.

Chapter Four provides detailed instructions and reference for controlling a SIGMA LT load bank with the hand-held control.

Chapter Five covers the maintenance procedures you will need to follow to keep a SIGMA LT load bank operating correctly. It also explains how to troubleshoot should a problem occur.

In addition to these five chapters there are a number of Appendices containing information that did not fit easily within the main body of the text. These include installation drawings, a certificate of conformity and some information about electromagnetic compatibility.

An Important Note on Safety

All Avtron load banks are designed with safety as a very high priority, but their operation does present some risks. In common with other test equipment, the safety of all concerned is dependent on the way that the unit is operated. Do not use this equipment unless you have read and understood this manual, and are familiar with the accepted practice for the industry. The equipment should not be used by unskilled personnel. Misuse could result in serious injury and damage to the equipment.

Be sure to follow all of the safety warnings in this manual. In particular, pay careful attention to the following points:

- Keep all personnel who are not directly involved with tests well away from the load bank and the equipment under test.
- The discharge air can be very hot and could cause serious flesh burns. Do not touch the outlet grille while the load bank is running, or for a few minutes afterwards.
- Ensure that there is no risk of the hot discharge air re-circulating back to the air inlet of the load bank, extensive damage is possible due to short-circuiting the cooling air.
- Ensure the air inlet and outlets are completely unobstructed and that there is no loose paper, plastic bags, or other debris that may be drawn on to the air inlet grille, obstructing the airflow.
- Combustible material left near the air discharge should be removed.
- Only operate the load bank with all the guards in place and with all of the covers and protective screens securely in position.
- Make sure that all equipment is adequately grounded; this applies equally to the Supply-on-Test, and the load bank.
- Ensure all cables are in good condition and adequately rated for the planned load, and that all connections are securely made.
- Ensure all cables are long enough to lay in smooth curves, and are unstressed, undamaged, and protected from mechanical damage. Lay the cables to minimise the risk of personnel tripping or accidentally tugging on the cables.
- Do not switch off the cooling fan immediately after a test. Allow the fan to run for 3 minutes after removing the load.
- Store the equipment in a clean, dry place when not in use. Only setup and operate the load bank in environmental conditions suited to the enclosure classification of the load bank.

Chapter One

Introducing Avtron Load Banks

If you are not familiar with the use of Avtron SIGMA LT load banks then you should start with this chapter. It provides an introduction to the general principles of power supply testing and then it explains how a SIGMA LT load bank makes the process easier, safer and more reliable.

If you are an experienced load bank user you may want to skip the earlier sections, but you should certainly read the introduction to Avtron SIGMA LT load banks which appears at the end of the chapter.

Why is Power Supply Testing Required?

There are many different ways of generating electrical power and many reasons why generating equipment may be required. All of them have at least one thing in common: it is essential that the generator be capable of operating effectively at its maximum rated output when it is required.

Unfortunately, it is not so easy to be absolutely sure that this will be the case. Many generating sets operate at a fraction of their rated output for a large proportion of the time, and many others are intended to run in an emergency situation which may occur only occasionally.

In both cases the only way to ensure that generating equipment is capable of providing the performance required is to regularly test it whilst it is operating at its full rated output.

The various regulatory authorities and other concerned parties such as insurance companies are aware of this, and the testing of new installations is mandatory. In many cases there is also a requirement for regular testing for existing equipment, particularly those that provide emergency or standby power supplies.

How can a generator be tested effectively?

The answer to this is very straightforward: apply a load that is equivalent to the generator's maximum output and then run the generator and observe how it performs.

The careful measurement of the generator's output will reveal any problems with its ability to meet the specification. Then, after repairs or modifications have been made, the test can be repeated to verify that the fault has been rectified.

The load bank

For reliable testing it is important to provide a load that is suitably sized for the generator's output. It must provide a consistent and repeatable load so that the test can be accurately measured and recorded and it must also be capable of dissipating the large amount of heat that is generated during the test. And, it is critically important that the test does not put the site load at risk.

To achieve all this requires a specialist item of equipment: the load bank. These consist of an array of load elements combined with a control system designed to ensure that a precise load can be applied in safety.

How Do Load Banks Work?

Load banks are complex precision engineered machines, but to explain the general principal we can provide a very simple model of how they work:

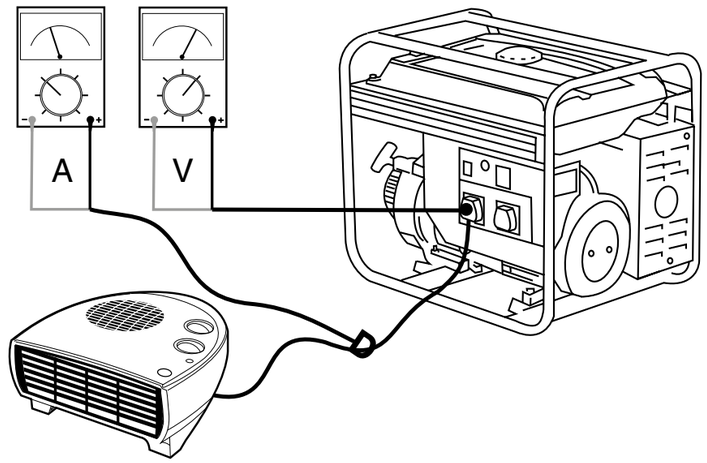

Figure 1-1 Basic DIY generator output test system.

Figure 1-1 shows the general arrangement of a very basic DIY generator testing system. It's simple, but it contains the four basic items necessary to test a generating set safely:

The fan heater's heating elements provide an electrical load that is large enough to ensure that the generator runs at full capacity.
The fan heater's switch gear provides a control system that will ensure that the load can be applied safely, and in a way that will not cause damage to the generator and its control circuits, or injury to the personnel running the test.
The fan in the heater provides a method of safely dissipating the considerable amount of heat generated by the test.
The voltmeter and ammeter provide instrumentation that will allow the results of the test to be monitored.

Of course, this kind of arrangement can provide only a crude test for a low powered generator and its ability to match the generator's output accurately is very limited. As the output of the generator increases, the cabling, switchgear and control equipment required for this becomes increasingly heavier and more sophisticated. In addition, because of the large amount of heat generated during testing, the issue of how to conduct the test safely becomes increasingly significant.

Introducing Avtron Load Banks

Avtron load banks are purpose designed to provide all of the facilities needed to quickly, safely and reliably test generating equipment with outputs up to several megawatts.

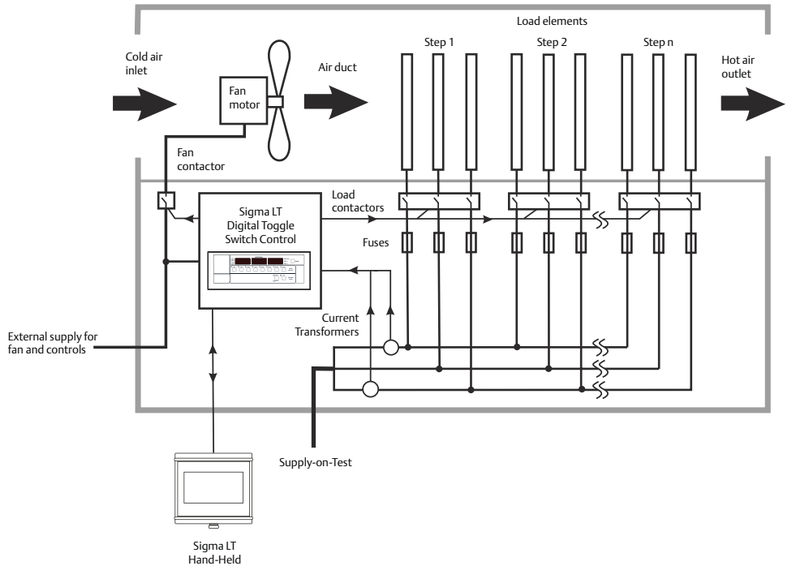

Figure 1-2 Avtron SIGMA LT load bank core components

There are variations between different Avtron SIGMA LT load bank models, but Figure 1-2 shows a simplified schematic of the core components to be found in most units.

The diagram contains:

- An array of load elements grouped in small steps that are individually activated by switchgear to allow the load applied to the generator to be precisely controlled.
- A fan and duct forced air system which ensures that the heat generated during testing is vented safely to atmosphere.
- Fuses and safety interlocks that ensure that the test can be shut down in a controlled fashion if any problems occur.
- Automatic precision control of the test and allow the results to be displayed with better than 0.5% accuracy.

Avtron Load Bank Control Options

Reliable testing requires precise control of the load applied to the generator and accurate real-time measurement of the generator's output. To achieve this, Avtron SIGMA LT load banks are fitted with a control panel and have the option of a hand-held control. SIGMA LT is a microprocessor-based control and instrumentation system specifically developed for load bank applications.

SIGMA LT Digital Toggle Switches

SIGMA LT digital toggle switches are fitted as standard to all SIGMA LT Load banks. Digital toggles provide local, resistive only load testing with single and three phase instrumentation on a seven segment display.

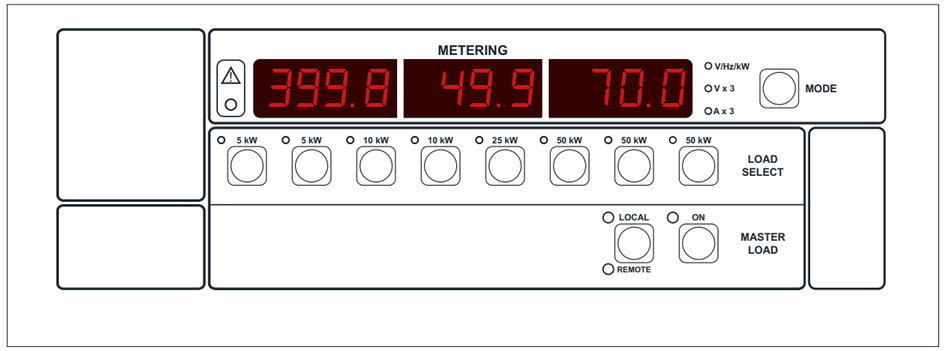

SIGMA LT Hand-Held

The SIGMA LT hand-held connects directly to the load bank to provide remote control and enables up to 25 load banks to be connected into a single network.

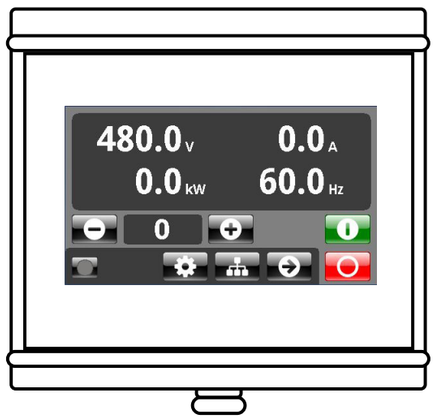

Load Bank Applications

The main application for a load bank is usually generator testing. However, load banks are versatile devices and they have a number of useful applications that can be applicable including data centre Heating Ventilation Air Conditioning (HVAC) testing and UPS testing.

Generating set testing

The specific tests that need to be carried out for a particular installation depend on local regulations, the application, the type of equipment involved and the requirements of insurance companies, local authorities and other interested parties.

Note: The specific details regarding the frequency and type of test required may also be specified by local regulations or other interested parties.

The requirements for the testing of engine driven generators are described in ISO 8528 part 6. This document explains the general test requirements and describes both a functional test and an acceptance test. Functional tests must always be done and usually occur at the manufacturer's factory. Acceptance tests are optional and are often done on site, witnessed by the customer or his representative.

ISO 8528 part 5 defines three performance classes - G1, G2 and G3, each with different criteria:

- G1 is the least stringent and applies to small generating sets intended to supply simple loads.
- G2 is broadly equivalent to commercially available power.
- G3 is intended for sets which are powering loads which particularly require a stable and accurate power supply.

A further class, G4, allows for performance criteria agreed between the supplier and the buyer.

In addition to the testing that is carried out immediately after installation, it is important to carry out regular tests as part of an ongoing maintenance program. This is particularly important for emergency power supplies that may have long periods of non-operation.

The type of tests carried out include:

- Load duration tests (also known as a "heat run"), designed to record steady-state voltages, frequency, and also to calibrate instrumentation and measure emissions and fuel consumption.
- Load acceptance tests, which check changes in frequency and voltage regulation due to sudden load changes. These tests ensure that the rise and fall of the generator's output voltage and frequency remain within limits as load is applied and removed.

Testing UPS systems and batteries

Uninterruptable power supply systems consisting of a generating set combined with a set of batteries are a common feature of data centres and other installations where maintaining a constant power supply is critical. In the event of a power failure the batteries provide an immediate source of power whilst the generator is automatically started, synchronised to the correct frequency and put online.

Regular testing of the batteries, generator and its automatic control gear is extremely important, but testing using the site load could put critical systems at risk and may not provide sufficient load for a complete test. Load banks provide an ideal solution because they will allow the operation of the UPS to be fully tested without posing any risk to the site load.

Data centre HVAC testing

Heating, ventilation and air conditioning (HVAC) systems are vital in providing cooling to server racks within data centres. The HVAC system must be able to maintain a constant cool temperature when the servers are working at full capacity. Load banks are a cost effective method of simulating heat produced by the servers. Operators can analyse how the HVAC system copes with the temperature rise, without risking the vastly expensive server racks over heating.

Using Multiple Load Banks

Avtron's SIGMA LT control system allows up to 25 load banks to be interconnected and controlled from a hand-held as if they were a single unit. This means that multiple load banks can be combined to match particularly large generating sets.

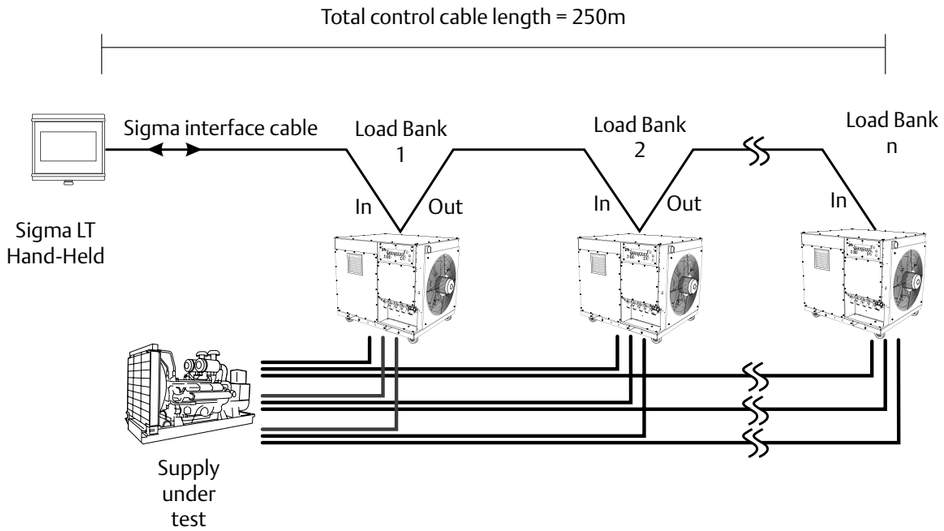

Figure 1-3 Connecting multiple load banks

Note: When multiple load banks of different capacities are used the load applied is shared proportionally depending on the ratio of the load banks' capacity. The cable sizes for the Supply-on-Test must take this into account.

An example of a multiple connected load bank application is for an HVAC testing and verification in a data centre. The networked load banks produce heat discharge throughout specifically selected areas in the data centre all controlled from a single SIGMA LT hand-held.

Introducing Avtron's SIGMA LT load banks

SIGMA LT load banks are resistive, portable load banks. The 3010, 3020 and 3040 are for indoor load testing and the 3010R, 3020R and 3040R are for outdoor testing. SIGMA LT load banks can be controlled either locally or remotely. The load banks can be linked together in a network to provide high capacity load tests with the functionality to control a specific load bank in the network.

Avtron SIGMA LT load banks are manufactured with painted or powder coated mild steel, folded and pop riveted together to form a monocoque construction. Load elements are cooled by a direct airflow provided by an axial fan.

Avtron SIGMA LT R load banks are manufactured from 2mm 'Zintec' steel, folded and welded to form a monocoque construction. Load elements are cooled by a direct airflow provided by an axial fan.

The input and output ducts are protected by stainless steel mesh screens. All of the electrical and electronic components are housed behind painted or powder coated mild steel panels with IP55 protection.

All SIGMA LT units are designed to be moved by either built in castors or with a forklift.

For more information about other load banks that Avtron can offer, please contact our sales team.

SIGMA LT Load Bank Specifications

	3010	3020	3040	3010R	3020R	3040R
Nominal capacity (kW)	110	200	400	125	250	500
Standard rated voltage (V)	400	400	400	400	400	400
Connection Type	PowerLock	PowerLock	PowerLock	PowerLock	PowerLock	PowerLock
External Fan and Control Supply	SIngle Phase	Single Phase	Three Phase	Single Phase	Single Phase	Three Phase
Length (mm)	973	1140	1410	1040	1140	1410
Width (mm)	733	870	1040	752	870	1050
Height on base (mm)	950	985	1445	1234	903	1749
Weight, approximate (kg)	150	220	400	250	300	TBC
Fan(s) - no. x diameter (mm)	1 x 450	1 x 560	1 x 710	1 x 450	1 x 560	1 x 710
Fan & control current (A)	6	10	10	6	10	10
Airflow direction	Horizontal	Horizontal	Horizontal	Horizontal	Horizontal	Horizontal

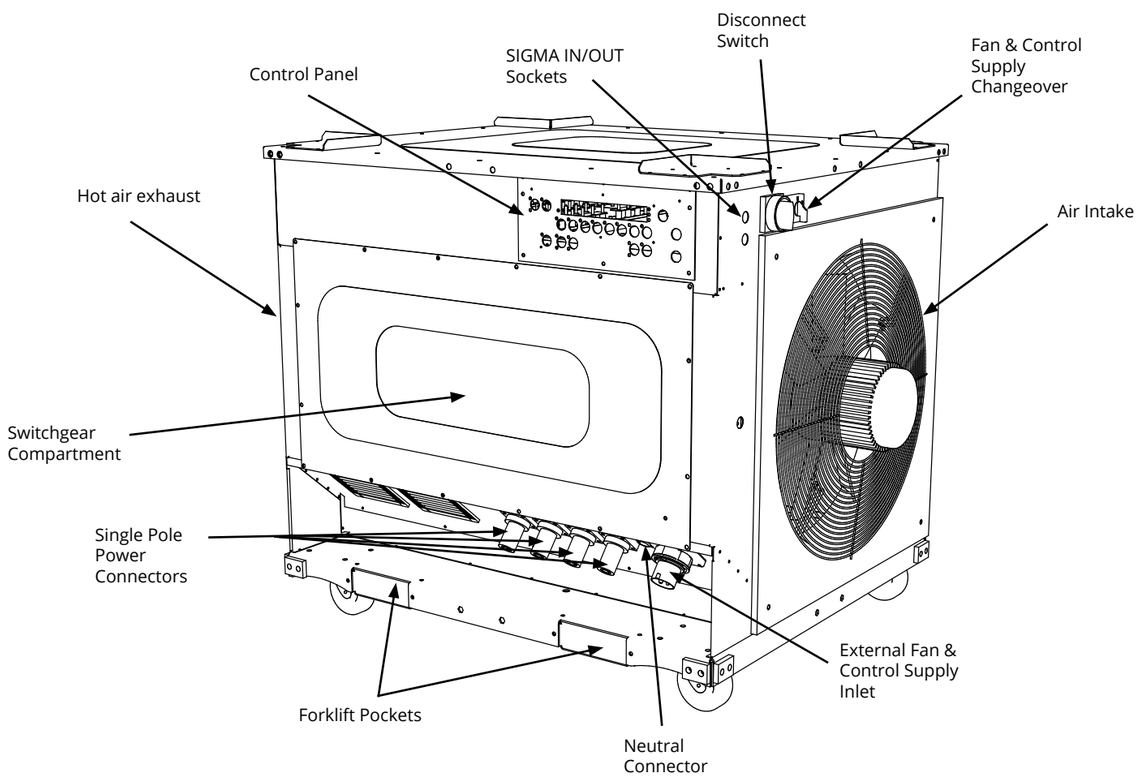

Figure 1-4 Avtron SIGMA LT 3020

Chapter Two

Load Bank Setup

This chapter covers all of the procedures that need to be carried out before a Avtron SIGMA LT load bank can be put into operation. It explains how to setup the unit safely and how to check that it will operate correctly.

Important!
The chapter contains a number of important safety instructions. Do not attempt to setup or operate the load bank until you have read and understood this chapter. Misuse could result in serious injury and damage to the equipment.

Using a Avtron Load Bank Safely

Your safety, and the safety of those around you, is dependent on your knowledge of this equipment's safe operating procedures. Load banks can be dangerous and must not be used by unskilled personnel, or by those who have not familiarized themselves with these instructions.

You should remain alert to potential danger during transport and setup, when the unit is in operation, and when maintenance operations are performed.

There are four main sources of danger:

Handling hazards. Load banks are large, heavy devices and they often have to be manoeuvred in to tight, difficult spaces before they can be setup.

Contact with high voltage electricity. Serious injury or death could result from contact with electrically live parts. Even though the connections to the load bank may be temporary, they must always be made to the same standards as if they were permanent.

Contact with fast moving parts. The fan, in particular, can cause serious injury if you come into contact with it when it is in operation.

Heat hazards. When a test is in progress the resistive elements can glow cherry red. The heat they produce is removed by the air that the fan forces past them, but that air in turn can become very hot.

To avoid these hazards, pay particular attention to the following points:

- Make use of the correct handling equipment and ensure that all personnel involved in transportation and setup have the appropriate training and experience needed to carry out the operation safely.
- Only operate the load bank with the covers and protective screens securely in position.
- Make sure that both the Supply-on-Test and the load bank are adequately grounded.
- Ensure all cables are in good condition and adequately rated for the planned load, and that all connections are securely made.
- Ensure all cables are long enough to lay in smooth curves, and are unstressed, undamaged, and protected from mechanical damage.
- Lay the cables to minimise the risk of personnel tripping or accidentally tugging on the cables.
- Keep all personnel who are not directly involved with tests well away from the load bank and the equipment under test.
- The discharge air from the load bank can cause serious burns. Keep away from the outlet grille while the load bank is running, and do not touch it for at least 10 minutes after the test is completed.

- Do not switch off the cooling fans immediately on concluding a test. After removing the load allow the fans to run for a further 3 minutes to dissipate the residual heat. This will reduce any fire risk and prevent possible damage to the equipment.
- Make sure that the air inlet and outlets are completely unobstructed and that there is no loose material that could be drawn in to the air inlet grille.
- Ensure that there are no combustible material near the air discharge.
- Keep an approved electrical fire extinguisher present at all times when the load bank is in operation.

Transporting Avtron Load Banks

Avtron SIGMA LT load banks will vary in weight depending on the model. Make sure you check the load bank name plate for the correct weight. SIGMA LT load banks have fork lift pockets and/or castors. Only lift from the forklift pockets and no where else.

Lifting by forklift truck

Warning! Avoid walking on the roof of the unit.

Check the specifications to ensure that the forklift truck has sufficient capacity to safely lift the weight. Add 5% to the specified weight for minimum packing, and 15% for a unit in an export wooden case.

Protection and securing on transport

If a load bank is carried on an open goods vehicle, it should be covered with a tarpaulin.

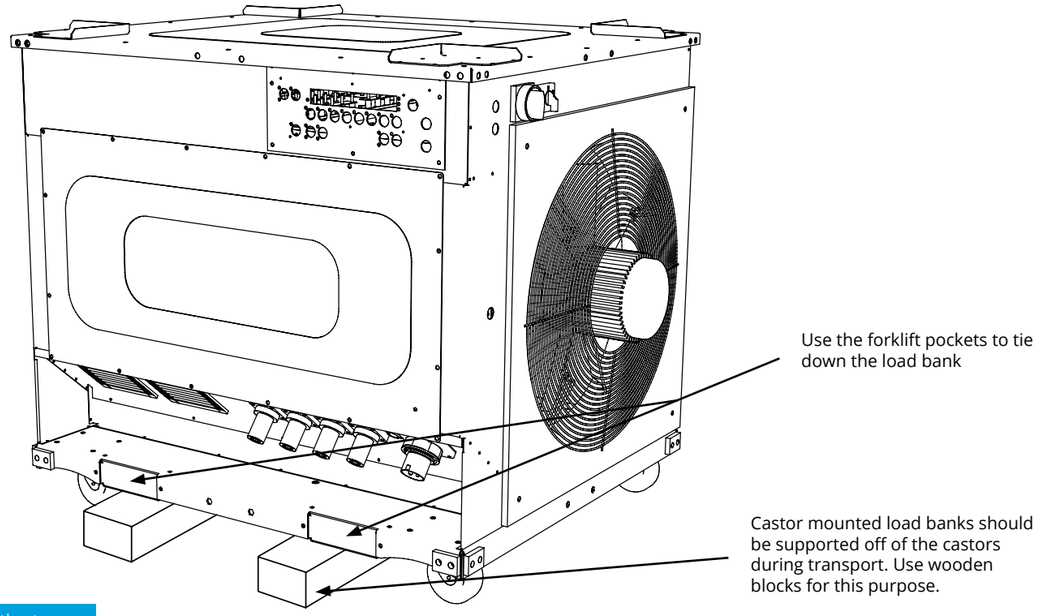

Note: Do not tie straps over the top of the load bank. The tie-down should be made through the pockets in the forklift pocket base only.

Figure 2-1 Castor-mounted load banks should be supported off the castors and firmly fixed down

Setting up Avtron SIGMA LT Load Banks

There are a number of factors that need to be considered before you select a load bank for a particular application. Obviously it is important to ensure that the load bank has sufficient electrical capacity to test the supply, but you also need to ensure that it can operate correctly and safely in the position you have chosen.

Location

The first thing to decide when setting up a load bank is where the unit is to be located. You need to consider the following to ensure that the unit can be operated safely:

Environment. SIGMA LT load banks are designed for indoor use only. SIGMA LTR load banks are designed for outdoor use. A standard SIGMA LT load bank can be used in an ambient temperature between -10°C and +40°C, at 90% relative humidity (non condensing), and at altitudes up to 1000m above sea level.

Loading. The load bank is heavy and must be setup on a level surface that is capable of supporting its weight (see nameplate).

Space. There must be sufficient space to provide access for maintenance to all of the panels and the protective inlet and outlet grilles. There must be at least one metre of clear space on the air intake side of the load bank (the fan side) and five metres of clear space on the air outlet side. See the appendices of this manual for the specific requirements of individual units.

Note: If necessary, a barrier should be erected around the hot air outlet to prevent any possibility of personal injury.

Airflow requirements. When it is operating a SIGMA LT load bank can require up to 4 m^3 of cooling air per second. As it passes through the unit, the air becomes hot enough to provide a risk of fire or personal injury.

When setting up the unit you need to make sure that there is adequate air available, that it can be discharged safely, and that there is no risk that the hot air will recirculate to the air intake of the unit.

Setup in a plant room

If the load bank is setup in a plant room you will need to pay particular attention to the airflow requirements of the unit. The temperature of the surrounding air must not rise above the maximum rated ambient temperature of the load bank (40°C is standard) and steps should be taken to prevent re-circulation of the discharge air.

You must take into account the requirements of any other equipment (heating plant, generating sets, compressors, or another load bank) that may also require a supply of cooling air. In these cases the total air requirement of all the plant must be added together to arrive at the required fresh airflow.

The air inlet and air outlet of the load bank must be in the same room, or space.

Inlet

The free area of any inlet grille or opening into the plant room should be at least twice the area of the load bank air outlet. If other plant in the same plant room requires air, then the size should be such that the maximum air inlet velocity is below 3m/sec. This should ensure that the depression within the plant room would always be less than 10Pa, relative to the outside environment. The distance from the fan inlet to a blank face of a wall or panel, square to the fan centre line, should be not less than 1m, or one fan diameter, whichever is the greater.

Attenuators incorporated in the plant room inlet grilles should be sized for a maximum pressure drop of 10Pa.

Outlet

The outlet opening must have a total free area of twice that of the load bank air outlet, plus whatever is required for any additional plant.

Wind effects

The load bank must be protected from the effects of the wind, which in some circumstances could defeat the fan. The inlet and outlet grilles or louvres should preferably be on the same side of the building. The effect of natural wind is then cancelled out, regardless of its direction. Other arrangements need careful attention, combined with detailed site and local knowledge to ensure satisfactory operation in all expected weather conditions.

Avoiding hot air re-circulation

To reduce the risk of hot air re-circulation place air inlets at low level and air outlets at high level. If this is not possible the inlets and outlets should be spaced well apart. Inlet and outlet louvres on the same level should have a clear space between them of at least three times the width of the largest opening. Strategically placed barriers and screens can help to separate the two air-streams.

Careful consideration should be given to the likely effect of nearby buildings, walls or even parked vehicles, which could seriously disrupt the free escape of hot air, and result in hot air re-circulation.

Other nearby air handling plant can also interfere with the airflow to, or from, the load bank. Equipment should be spaced well apart and positioned so that their airflows complement each other rather than compete.

When multiple load banks are being used it is important to ensure that the hot air from one load bank does not exhaust directly or indirectly on to any other load bank.

Packaging

Before starting setup remove all packaging. Dispose of it in the appropriate way.

Electrical Installation

The electrical installation for a load bank consists of making connections both for the Supply-on-Test and for an external supply that is used to power the load bank's fans and control system.

Note: The Load Bank supply cables must be protected by a Short Circuit Protective Device (SCPD), which is suitably rated to the capacity of the supply cables.

The requirements for the two supplies are described separately here, but the following general points apply in both cases:

- The work must be carried out by a person with the appropriate training, qualifications and experience.
- All cables should be appropriately rated and installed in accordance with current standards and accepted practice.
- The cables for the supply must be sized appropriately and properly fitted terminals must be used.

Voltage and frequency ratings

Ensure the external supply rating matches the voltage and frequency of the control circuit.

Exceeding the voltage ratings or supplying the wrong frequency can cause damage to the load bank so please check the plate carefully before setup.

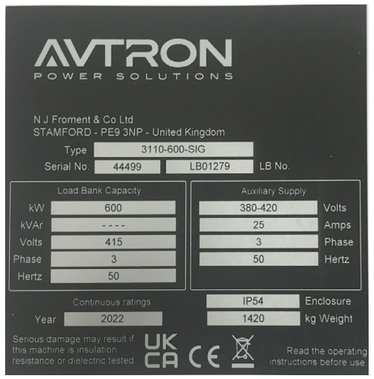

Figure 2-2 Consult the load bank's name plate for voltage and current ratings before making connections

External supply wiring - the fan and controls power source

We recommend that you use an external power supply that is independent of the Supply-on-Test. This ensures that the load bank will continue to operate without interruption if the Supply-on-Test becomes unstable or fails.

Refer to the load bank's rating plate for the external power supply requirements. The supply must be capable of supplying the fan motor starting current, and must be fused accordingly. Load banks designed to be movable are fitted with an external power input plug on the outside of the load bank.

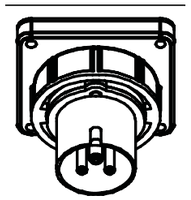

Figure 2-3 16A single phase, external power inlet for the fan and control circuit

The load bank is supplied with a 16A external cable coupler. Refer to figure 2-4 for correct wiring configuration.

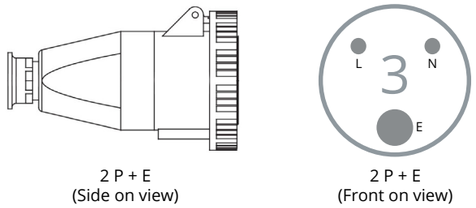

Figure 2-4 16A single phase external cable coupler

Load banks designed to be movable are fitted with a 3-position supply selection switch. If powering the control circuit using the cable coupler, set the switch position to 'External'. If using the supply on test to power the control circuit, set this switch to the 'Internal' position.

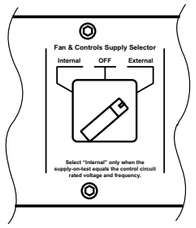

Figure 2-5 The fan and controls supply selector fitted to movable load banks

Connectors

The load bank is fitted with 400A, single pole PowerLock connectors to allow quick connection and disconnection of the cables.

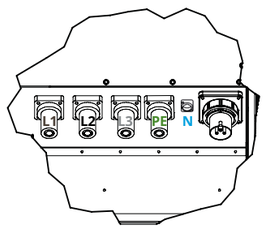

Figure 2-6 400A, Single pole PowerLock connectors

If the fan and control circuit is to be derived from the supply on test, ensure a neutral cable is connected into the neutral socket.

Supply-on-Test wiring - general points

- It is good practice to route the three phase conductors in a close tre-foil layout, held together with cable-ties. This minimises stray magnetic fields from the cable array, and reduces inductive losses in the cables. In the event of a high fault current flowing this arrangement minimises the risk of sudden and violent cable movements.
- If the connections are made using more than one conductor for each phase connection all the cables on any one phase should be of exactly the same length, and laid along a similar route. Ensure that the three phase conductors are equally shared between multiple cable entry openings, to minimise eddy current losses.
- The load bank supply cables must be protected by the short circuit protective device (SCPD) which is suitably rated to the capacity of the supply cables.

Is a local isolator required?

When planning the installation consider if a local isolator switch is required. If the output circuit breaker of the Supply-on-Test is easily accessible, then this can perform the isolating function.

Protective earth connection

An earth conductor must always be bonded to the frame of the Supply-on-Test and connected to the grounding terminal of the load bank (marked PE).

Making connections for single-phase operation

3-phase load banks can be used for testing single-phase supplies. The method of connection (and the load available) will vary depending on the rating of the load bank, the supply voltage and frequency. Refer to chapter 4 for more information about changing between single and three phase testing.

Single phase wiring

Note: If the load bank is fitted with a 3-phase fan motor, an external 3-phase mains input will be required for the controls and fan supply.

Single-phase operation is achieved by connection between two phase terminals, one of which is used as neutral.

A-C connection mode. The A-C connection mode shown in Figure 2-6 will give approximately 50% loading capacity when the nominal load bank supply voltage is connected or 17% loading capacity when a single-phase (√³) equivalent supply is used.

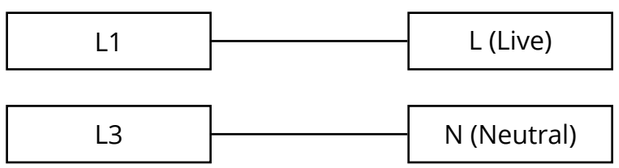

Figure 2-7 A-C connection for a single phase supply

The maximum permissible single-phase supply voltage for this connection is 100% of the 3-phase load bank rated voltage.

AB-C connection mode. The AB-C connection mode shown in Figure 2-7 will give approximately 66% loading capacity when the nominal load bank supply voltage is connected or 22% loading capacity when a single-phase (√³) equivalent supply is used.

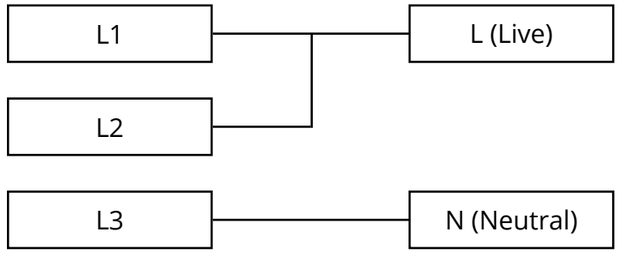

Figure 2-8 AB-C connection for a single phase supply

The maximum permissible single-phase supply voltage for this connection is 86% of the 3-phase load bank rated voltage.

Control System Connections

SIGMA LT load banks all have digital toggle local controls on the load bank. Alternatively connect the hand-held to the upper connection socket for remote control of the load bank and to control multiple load banks in a network.

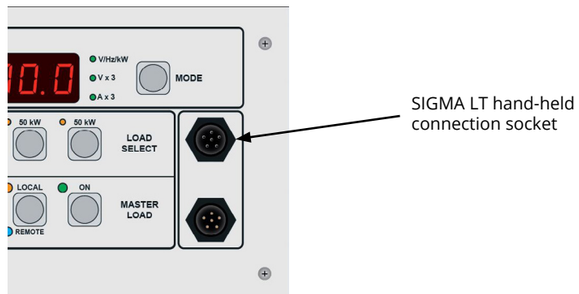

Figure 2-9 The SIGMA LT control cable connector.

Chapter Three

Digital Toggle Switch Control Operation

This chapter explains the local digital toggle switch operation of Avtron SIGMA LT load banks. It describes the functions of the various buttons and displays. For troubleshooting and error message see chapter 5.

Before Operating the Load Bank

Ensure that:

- The load bank has been setup according to the instructions and safety warnings in Chapter Two.
- The external supply (for fans and controls) is connected according to the instructions in Chapter Two.
- The supply under test is connected according to the instructions in Chapter Two.

Safety warning

Do not attempt to operate the load until you have read and understood this manual. Misuse could result in serious injury and damage to the equipment.

- Keep all personnel who are not directly involved with testing the supply well away from the load bank and from the equipment under test.
- The discharge air can be very hot and can cause serious burns. Do not touch the outlet grille while the load bank is running, or for a few minutes afterwards.
- Only operate the load bank with all the guards in place and with all of the covers and protective screens securely in position.
- Ensure that there is no risk of the hot discharge air re-circulating back to the air inlet of the load bank, extensive damage is possible due to re-circulating the cooling air.
- Ensure that there is no loose paper, plastic bags, or other debris that could be drawn in to the air inlet, or any combustible material left within range of the air discharge.
- After removing the load at the end of a test allow the fan to run for three minutes to dissipate the residual heat.

Turning the load bank on and off

The load bank provides a method of quickly starting and shutting down the load bank:

Warning! Operating the Fan and Controls Supply Isolator or Stop Button does not isolate the Supply-on-Test from the load bank wiring. Some of circuits within the load bank will remain live.

The Fan and Controls Supply Isolator. This is a two position switch which isolates the power supply to the fan and controls when it is in the off switch. It can be used to perform an emergency stop, but it can also be padlocked in the off position and this means it can be used to secure the load bank from unauthorised operation.

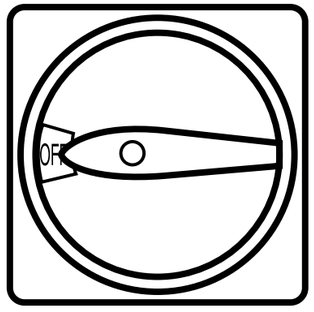

Figure 3-1 The Fan and Controls Supply Isolator

Introduction to SIGMA LT Digital Toggle Switches

The SIGMA LT digital toggles are fitted as standard to all SIGMA LT load banks. The control panel is for local control only and instrumentation is displayed on the seven segment digital display.

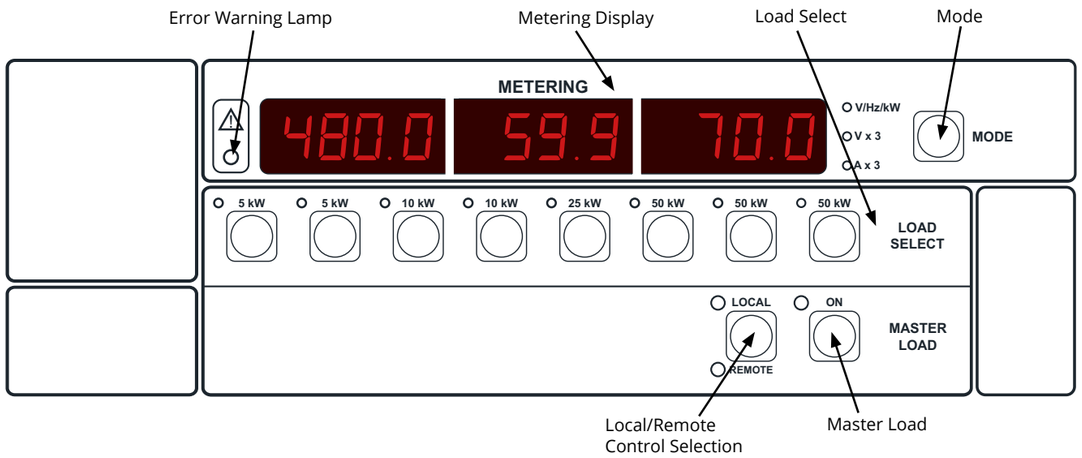

Figure 3-2 SIGMA LT digital toggle control panel

Warning! The Fan and Controls Supply Isolator does not isolate the main power wiring from the Supply-on-Test. Some of the circuits within the load bank will remain live when the switch is in the off position.

MODE. The mode button has three functions.

1. Press mode to cycle through the different instrumentation displays: 3 phase Voltage and Currents or Voltage, Frequency and Power. The LED will illuminate of the instrumentation selected. (Please note cycling through instrumentation is only available in 3 phase mode).
2. Press and hold mode for 4 seconds to select single phase (1ph A-C | Conn 1Ph A-C or 1ph AB-C | Conn 1Ph A-bC) and three phase (3ph ABC | Conn 3Ph AbC) connections. Leave for 5 seconds to select. Ensure the connection mode selected matches the power connection wiring.
3. Press mode to acknowledge an error if displayed.

LOAD SELECT. The load select buttons have two functions.

1. Press and hold at power up to set the load limit. See figure 3-3. Please note the load limit selected will be saved.

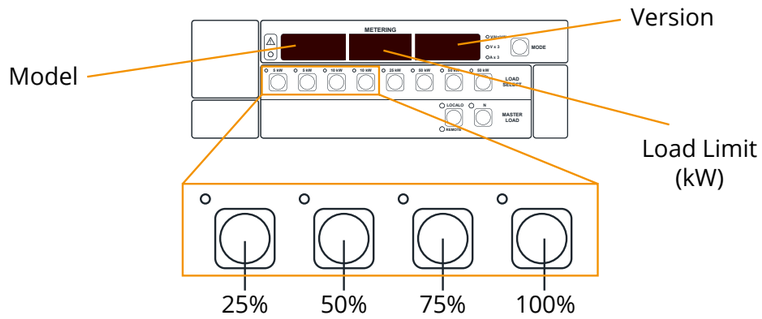

Figure 3-3 Load limit buttons with load limit amounts.

2. Press any combination of the load select switches to choose the required load in kW. LED's will illuminate of those selected. If 30kW is required, press 5kW, 5kW, 10kW and 10kW. Then press master load on. Alternatively if master load is already on there will be a one second delay then load will be applied automatically. The one second delay allows a synchronous load change.

MASTER LOAD. Master load applies any load selected when turned on and rejects all load when turned off. The master load LED will illuminate when on and extinguish when off.

LOCAL/REMOTE CONTROL SELECTION. Switch between local and remote control. Selected control will be indicated by the illuminated LED. Remote control mode is only available when a SIGMA LT hand-held is connected. Control will automatically switch to the hand-held when connected.

ERROR WARNING LAMPS. LED lamp will illuminate if an error occurs, the error type will appear on the metering display. Press mode to acknowledge the error.

SIGMA LT Digital Toggle Switches - Quick Start

1. Connect the load bank to a power source and the supply on test (see chapter 2).
2. Turn the fan and controls supply isolator on.
3. Turn the master load switch on. The master load LED will illuminate. If load is applied, press master load to immediately reject all load on test.
4. Press any combination of the load select switches to choose the required load in kW. For example, If 30kW is required, press 5kW, 5kW, 10kW and 10kW. Then press master load on. Alternatively if master load is already on there will be a 1 second delay then load will be applied automatically.
5. Repeat step 4 to change the load i.e. if the load required is now 20kW press one of the 10kW switches to deselect and after a one second delay 20kW of load is applied. The one second delay provides a synchronous load change.
6. Press mode to cycle through the instrumentation types.
7. Press master load to reject all load on test.

Chapter Four

Hand-Held Control Operation

This chapter explains the optional hand-held operation of Avtron SIGMA LT load banks. It describes the functions of the setup, buttons and displays. For digital toggle switch operation see chapter 3 and for troubleshooting and for error messages see chapter 5.

Introduction to the SIGMA LT Hand-Held

The SIGMA LT hand-held is an optional method of control for networking load banks. Up to 25 SIGMA LT load banks are able to be connected in a single network. SIGMA LT also provides individual control of any load bank in the network.

Why network load banks?

- Networking allows remote control of the load bank from up to 250m.
- Smaller load banks can be networked for increased capacity, perfect for testing where a larger load bank would not be suitable i.e. basements and roofs.
- Finer load resolution can be achieved by networking a load bank with small load steps with larger load banks.
- Redundancy can be achieved by using n+1 load banks. This can be important when running 24 hour commissioning tests.

The Hand-held

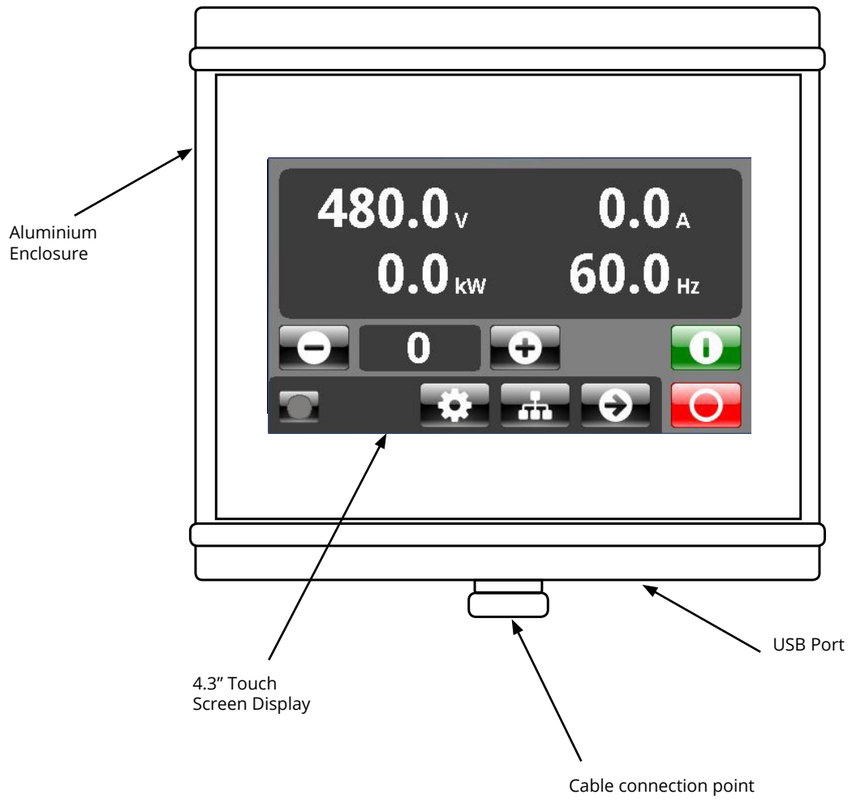

Figure 4 - 1 The SIGMA LT Hand-held

Key

See below for the list of symbols that will need to be used for operation of the hand-held control.

Load Selection

- Decrease Load
- Increase Load
- Manual Load Entry
- OK
- Apply Load
- Reject Load

Other Symbols

- Load Bank ID
- USB Found

Navigation

- Next Screen
- Down Screen
- Back Screen
- Network Overview
- Network Search
- Settings
- Status - Load Off
- Status - Load On
- Status - Load Warning
- Status - Error
- Single Load Bank Control

SIGMA LT Hand-Held Screens Overview

The hand-held has a number of screens for various functions. Below lists the main screen types with arrows showing the button and navigation flow.

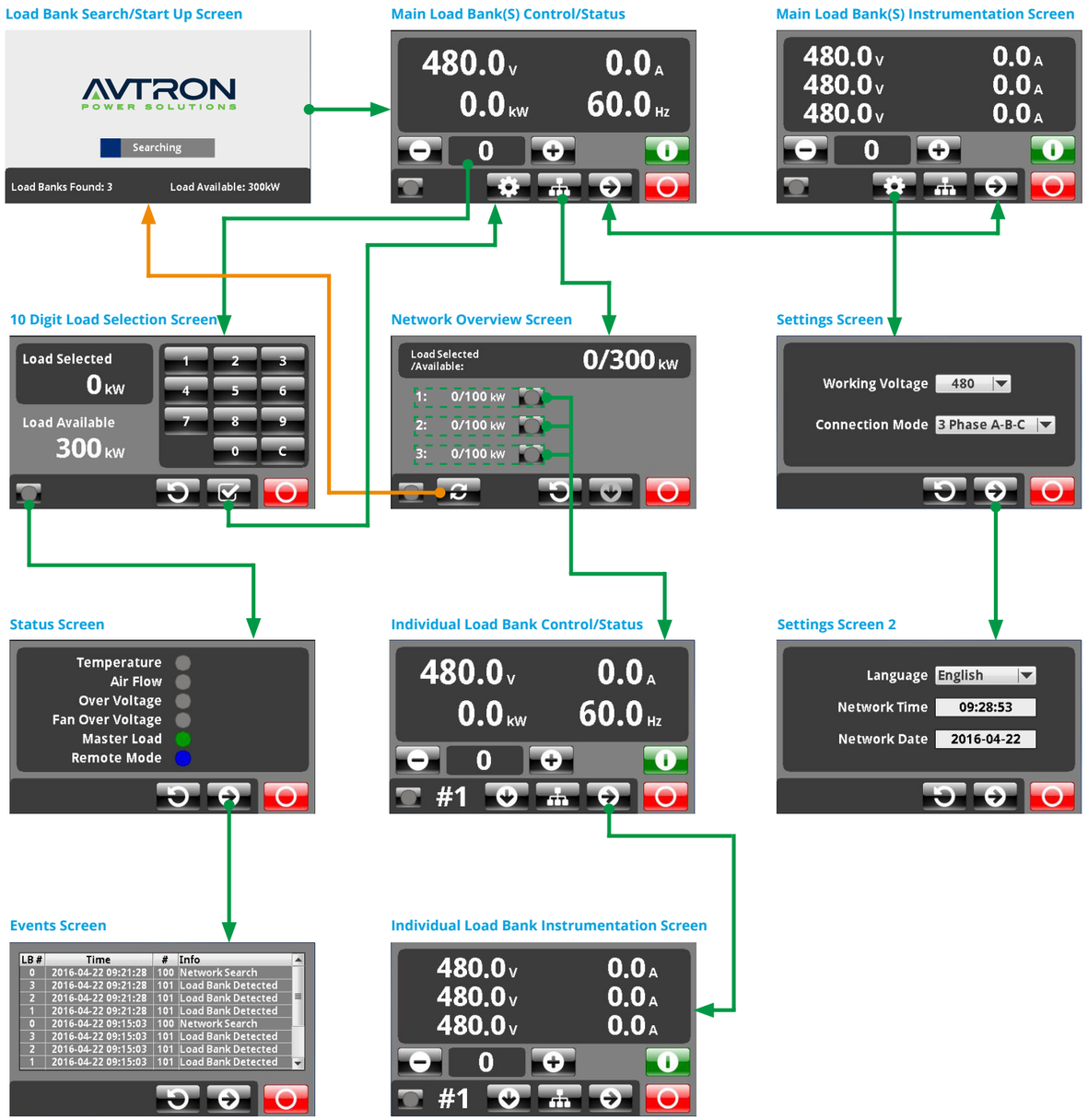

Set Up

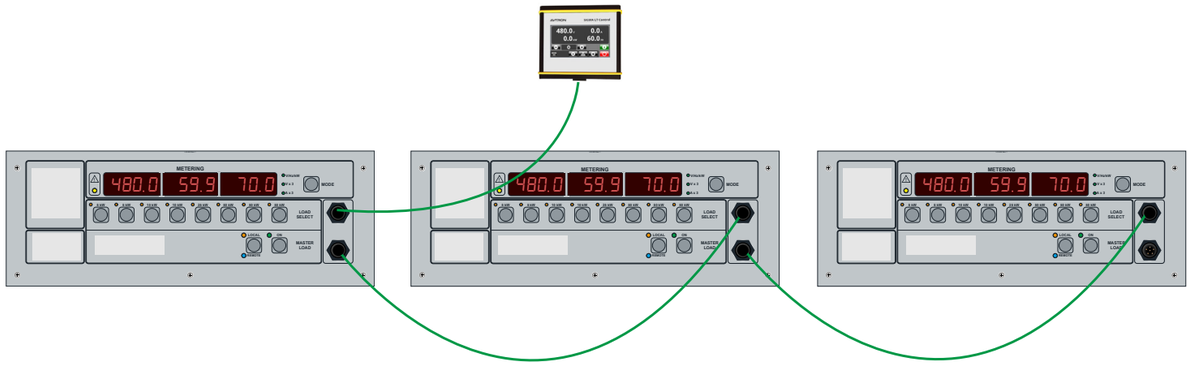

Note: In the settings menu match the working voltage to your supply on test. This will ensure the correct load is applied.

Figure 4-2 SIGMA LT network cable connection configuration

- Connect load banks to supply on test (see chapter 2).
- Using the network cable, connect the hand-held to the first load bank in the upper socket.
- Connect other load banks by using a second network cable from the lower socket to the upper socket of the next load bank (repeat as necessary).
- The load bank metering display will automatically turn on when powered.
- The hand-held will first search for load banks. New load banks will be automatically added to the network as they are discovered.
- The hand-held will display the supply instrumentation and load control screen ready for load to be applied.

Load Control

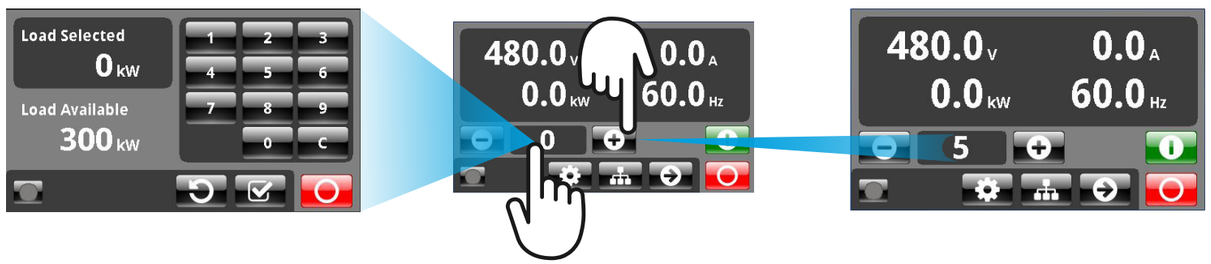

Figure 4-3 Load selection screen options

Note: Load increases and decreases by the minimum load resolution in the network.

Voltage, Current, Power and Frequency are shown in the frame at the top of the screen. Press Next Screen button to display full 3-phase instrumentation.

Select Load (load values in kW)

- Select Load using increase load and decrease load buttons.
- Alternatively press on the manual entry 0 to open the keypad and type in the new load selected and press OK.

Apply and Reject Load

- Apply load by pressing apply load button . Applied load will be shared between the load banks on the network according to the load bank size and minimum load resolution.
- The load change is synchronised across all load banks.
- The hand-held instrumentation will display the accumulated power and current from all load banks on the network.
- The status button on the bottom left will turn green as a sign that load is applied.
- The load banks will now be in remote mode, and a blue remote light will be illuminated on the load bank control panels.
- To reject all load on test press the reject load button .

Load Banks in a Network

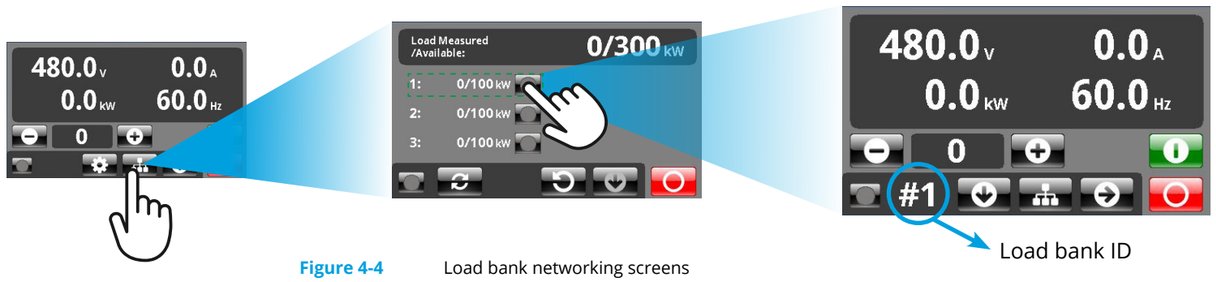

Figure 4-4 Load bank networking screens

With more than one load bank in a network, it may be useful to see an overview of the load banks connected and individually control each one.

- From the main instrumentation screen, press the Network Overview button. The screen will show load measured in kW as a total on the network and for each load bank.
- The Network Overview will summarise the load measured and the load available on the whole network and for each individual load bank.
- Load banks will be added to the network in the background if they are discovered, however the Network Search button will refresh the search if required.
- Press a load bank 1: 0/100 kW to view instrumentation and control it individually.
- The load bank ID #1 is displayed on the bottom line and the blue remote lamp will flash on that load bank. In this way you can identify which load bank you are controlling.
- Load control from this screen will be specific to this particular load bank*.
- Press Down Screen to move to the next load bank or press Network Overview to go back and view all load banks in the network.
- Use load control (page 4-6) to apply and reject load.

Note: The first load bank turned on will have the ID #1 the second #2 and so on. Utilise this feature to map out the load banks as required.

*Load applied to the entire network will override individually assigned load on a specific load bank.

Data Logging

Figure 4-5 A USB symbol will appear when connected and will blink when logging is active

- Instrumentation data logging is available when a USB flash drive is connected to the hand-held. A USB symbol will appear in the top right corner of the main screen to show it has been found.
- Data logging will automatically start when load is applied to all load banks in the network. The USB symbol will blink when writing data to the USB.
- Reject load on all load banks in the network to stop data logging. Do not remove USB when load is applied.
- A tabular separated file is created with the file name ddhhmmss.txt. This contains 3 Voltages, 3 Currents and Frequency of every second in the test.
- The data can be opened in spreadsheet software for further analysis.

Firmware upgrades

- To upgrade the firmware in either the hand-held or the load bank connect USB device containing the upgrade files. This process will upgrade all of the load banks in the network. Contact our support team for more information about the latest firmware files.

Settings

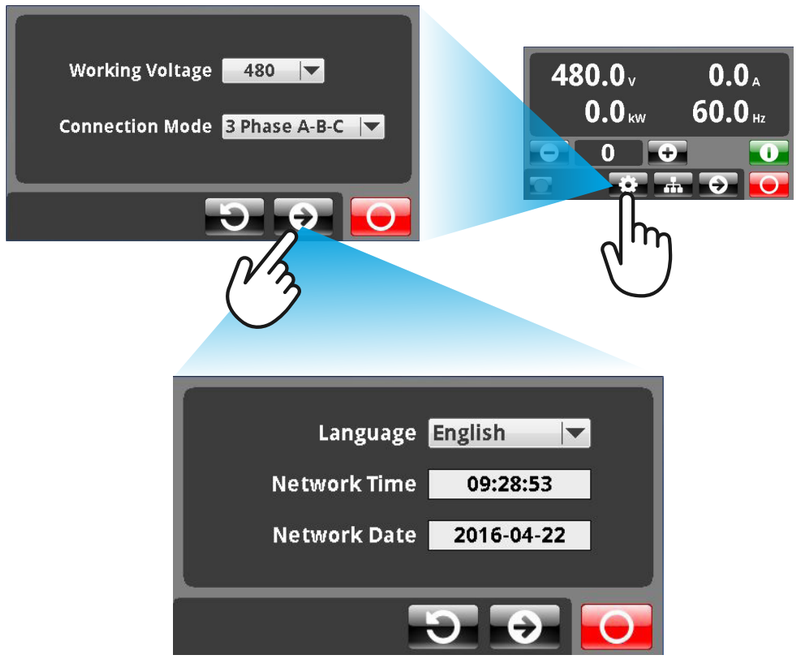

Figure 4-6 Hand-held settings screens

- From the main screen, press Settings.

Working Voltage

- Setting the working Voltage will recalculate the load capacity allowing the correct load to be applied at the set voltage. As default the hand-held will be set at the nominal voltage of the load bank.

Connection Mode

- Select the connection mode required. Three phase is the default setting.

Network Time and Date

- Press the next screen button . Network Time and Date will synchronise the time stamp in all of the networked load banks. Network time and date is important for correct data logging.

Language

- Select from various languages in the language menu.

Status & Events

Figure 4-7 The status and event screens

- If an error occurs on the load bank, an error message 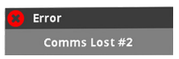 will be displayed on screen.
- Pressing the screen will acknowledge the error, and the load bank will be removed from the network until it is operating correctly.
- From the main screens, press  to access load bank status. Load bank status LEDs will visually show the load bank status to quickly show any errors.
- Press next screen  to display the load bank and hand-held event history. This will be updated as new events occur. This feature is also available for individual load banks in the network.

Chapter Five

Maintenance & Troubleshooting

This chapter describes both the routine maintenance procedures needed to keep Avtron SIGMA LT load banks operating correctly and the procedures you may need to troubleshoot the equipment if you run in to a problem using it.

Safety Warning

Maintenance work should be undertaken only by qualified personnel who are fully aware of the danger involved and who have taken adequate safety precautions.

Always isolate all the supplies to the equipment before inspecting, moving equipment, removing or replacing parts.

Work on the equipment while the electrical supplies are connected is not normally necessary. If it should become necessary for any reason, take extreme care not to come in to contact with live parts.

You should remain alert at all times when the unit is in operation. There are three main sources of danger:

Electricity can kill. Serious injury or death could result from contact with electrically live parts. Even though the connections to the load bank may be temporary, they must always be made to the same standards as if they were permanent.

Load banks contain fast moving parts. The fan, in particular, can cause serious injury if you come into contact with it when it is in operation.

Load banks produce a lot of heat. When a test is in progress the resistive element can glow cherry red. The heat they produce is removed by the air that the fan forces past them, but that air in turn can become very hot.

Routine Maintenance Procedures

To keep the load bank in good working order, carry out the following maintenance tasks at the specified intervals:

Daily (after transportation or before each use of the load bank):

- Inspect the equipment for signs of damage.
- Ensure that the inlet and outlet grilles are free from dirt, debris or obstruction. Remove the grilles and clean them if necessary.
- Check that both the external supply and the Supply-on-Test are properly connected.
- Check that the connecting cables are free from damage.
- Check that all cables are secured and routed so that they do not present a safety hazard.
- Ensure all panels are secure.

Monthly

Warning! The fan can cause serious injury when it is in operation. Ensure that the supply is isolated before removing safety covers.

- Clean and inspect painted surfaces for damage or corrosion and touch up as necessary.
- Check that there is no build up of dirt or debris on the load elements.
- Check that the fan rotates freely.
- Isolate the supply and then inspect the resistive load element terminals, ensuring that they are tight and show no signs of overheating.
- Visually inspect the switchgear cabinets, wiring, fuses and contactors for signs of overheating.
- Visually inspect and clean all filters.

In addition, carry out a load check to ensure that load contactors and elements are operating correctly:

1. Connect a supply (at the load bank's rated voltage) to the load bank.
2. Set and apply loads at 30%, 60%, and 100%, and make a note of the power value shown on the instrumentation (or external metering).
3. Check that the power values are within 5% of the load set on the controller.

Note: The recommended interval for a calibration check is one year, unless the equipment has been subject to misuse or damage.

Annually

Verify the load bank instrumentation's calibration. If adjustment is required contact Avtron for advice.

Fault Finding

The following chart covers some of the typical faults you might encounter and some possible solutions.

Fault	Possible Causes	Possible Solutions
Cooling fan does not start or run	No load applied	• The cooling fan may not run until load is applied. Apply the load and verify that the fan starts.
	No power to fan	• Check that the Fan and Controls Supply Isolator is turned on. • Confirm that the control supply fuse is not blown.
	Fan thermal overload tripped	• Check that the fan is not obstructed and that it is free to rotate. • Check the motor current and overload setting.
No load is being applied	Supply-on-test is not switched on.	• Confirm that the Supply-on-Test circuit breaker is switched on. • If fitted, ensure that the load bank circuit breaker(s) is switched on.
	Load bank over temperature trip	• Allow the load bank to cool and reset over temperature trip. • Check that the airflow through load bank is unobstructed. • Check for any signs of hot air re circulation.
	Faulty or damaged connecting lead	• Check that the hand-held lead and connectors are not damaged. Use local operation for testing.
Incorrect or wrong load is applied	Supply-on-test voltage	• Ensure the working voltage and connection settings are correct.
	Excessive volt drop	• Check rating of cables. • Check generator AVR droop settings.
	Single phase operation or phase missing	• When testing a single phase generator, check the method of connection in the hand-held or digital toggle switch control settings. • For three phase operation verify that all of the phases are present.
	Loading problem	• Check the load fuses. • Check the load contactors. • Check the load elements.

SIGMA LT Load Bank Status Display

The load bank status is displayed on the seven segment LED located on the SIGMA LT front control panel.

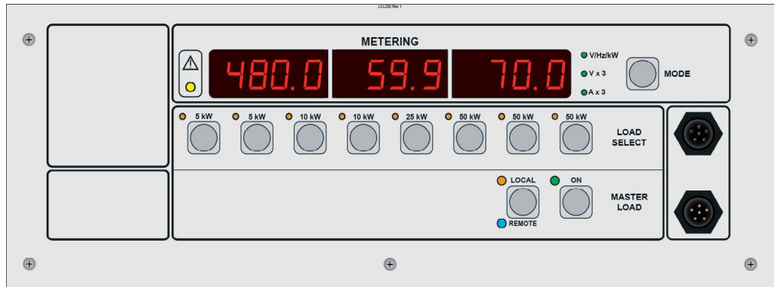

Figure 5-1 The SIGMA LT digital toggle switch panel LED display

SIGMA LT Digital Toggle Switches - Error Messages

Error Type	Display	Possible Causes
Communications Loss (transmit error)	Err Conn t	• Unplugged cable from load bank to hand-held • Damaged cable
Communications Loss (receive error)	Err Conn r	• Unplugged cable from load bank to hand-held • Damaged cable
Over Voltage	Err OVEr VoLt	• Voltage applied is too high for the load bank
Low airflow (if fitted)	Err AIr FAIL	• Check that the fan is not obstructed and that it is free to rotate.
Motor Overload	Err FAn OVEr	• Check that the fan is not obstructed and that it is free to rotate. • Check the motor current and overload setting.
Over Temperature “1”	Err OVEr tC 1	• Allow the load bank to cool and reset over temperature trip. • Check that the airflow through load bank is unobstructed. • Check for any signs of hot air re circulation. • Check all fans and filters on the load bank are unobstructed
Supply line error	Err SPLY LInE	• Error in supply connection, check wiring according to single phase connection mode
Internal Software Error	Err SoFt FAIL	• Software fault. Please contact our support team.
Firmware update required	InFo UPd SYS	• Firmware update required in either the hand-held, SIGMA gateway or PC system.

SIGMA LT Hand-Held Display

As well as the SIGMA LT digital toggle display messages and errors will also appear on the hand-held. The hand-held will show load bank specific and overall network messages.

Note: When the hand-held is connected, errors will display on the hand-held only and not on the digital toggle control panel.

Figure 5-2 The SIGMA LT Hand-held error display

SIGMA LT Hand-held - Error Messages

Error Type	Display	Possible Causes
Communications Loss	Comms failure	• Unplugged cable from load bank to hand-held. • Damaged cable.
Wrong Voltage (if dual voltage is fitted)	Wrong voltage	• Voltage applied is too high for selected voltage - ensure voltage is correct.
Over Voltage	Over voltage	• Voltage applied is too high for the load bank.
Low airflow (if fitted)	Air fail	• Check that the fan is not obstructed and that it is free to rotate.
Motor Overload	Motor Overload	• Check that the fan is not obstructed and that it is free to rotate. • Check the motor current and overload setting.
Over Temperature “1”	Over temp failure	• Allow the load bank to cool and reset over temperature trip. • Check that the airflow through load bank is unobstructed. • Check for any signs of hot air re circulation. • Check all fans and filters on the load bank are unobstructed.
Supply line error	Supply line error	• Error in supply connection, check wiring according to single phase connection mode.

Error Type	Display	Possible Causes
Data logging file open failure	Log open failed	• USB flash drive corrupted or unreadable. • USB port damaged. • Unplugged USB.
Data logging file write failure	Log write failed	• USB flash drive corrupted or unreadable. • USB port damaged. • Unplugged USB.
Internal Software Error	Comms failure	• Software fault. Please contact our support team.

Other Messages

	Display	Possible Causes
Network search	Network search	• Searching network for load banks
Load bank detected	Load bank detected	• New load bank has been found in the network

Appendices

The following pages contain additional information that may be useful but does not easily fit in with the rest of the text. This includes a specification for each of the Avtron SIGMA LT load banks and a number of diagrams that show dimensions and space requirements for each unit.

3010 - Installation Diagrams

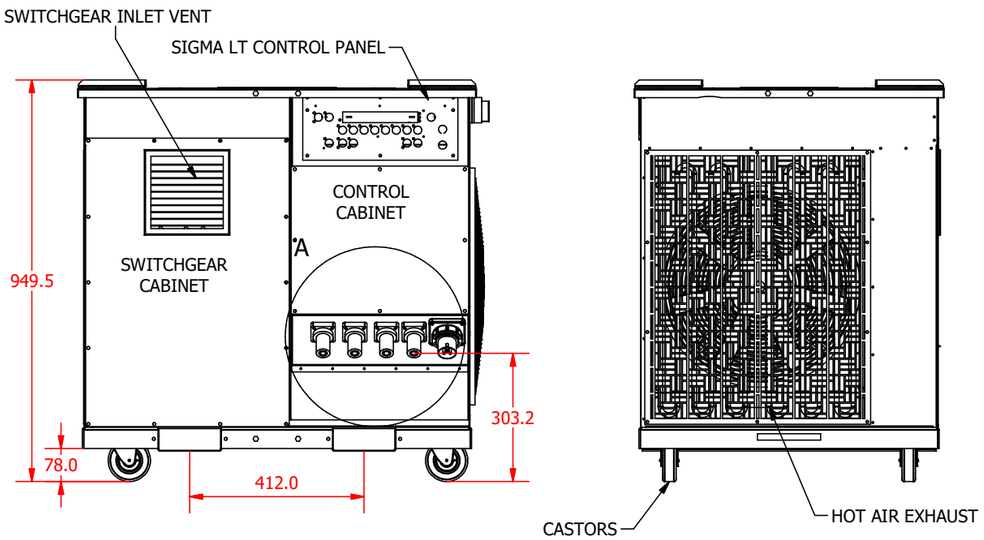

Figure A-4 3010 front view and side view

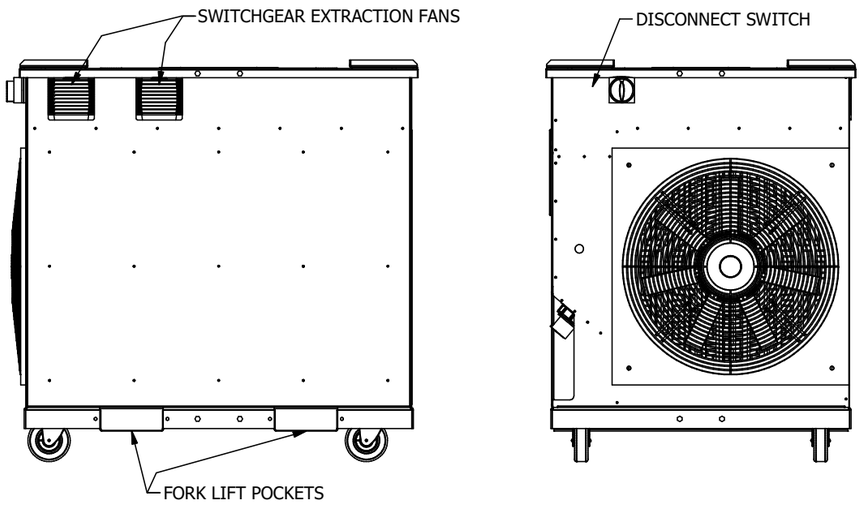

Figure A-5 3010 back and side views

3010 - Installation Diagrams

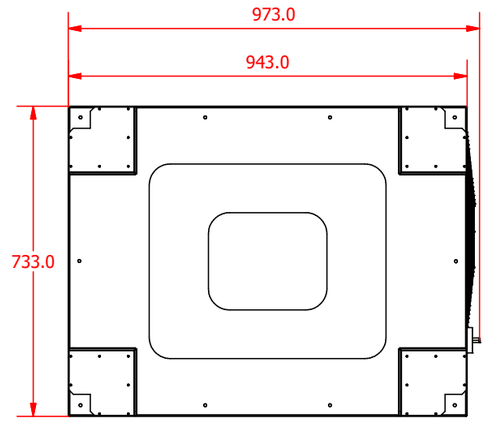

Figure A-6 3010 plan view

3020 - Installation Diagrams

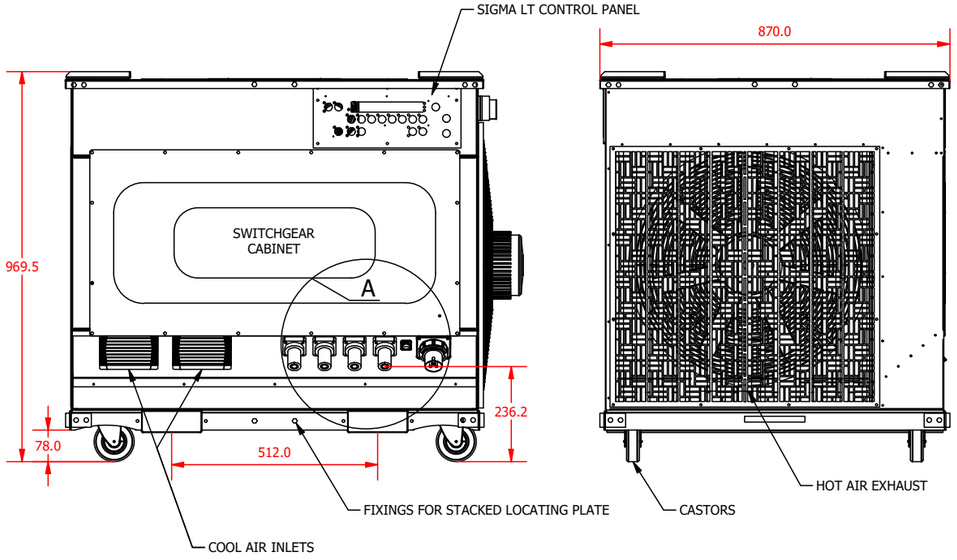

Figure A-1 3020 front view and side view

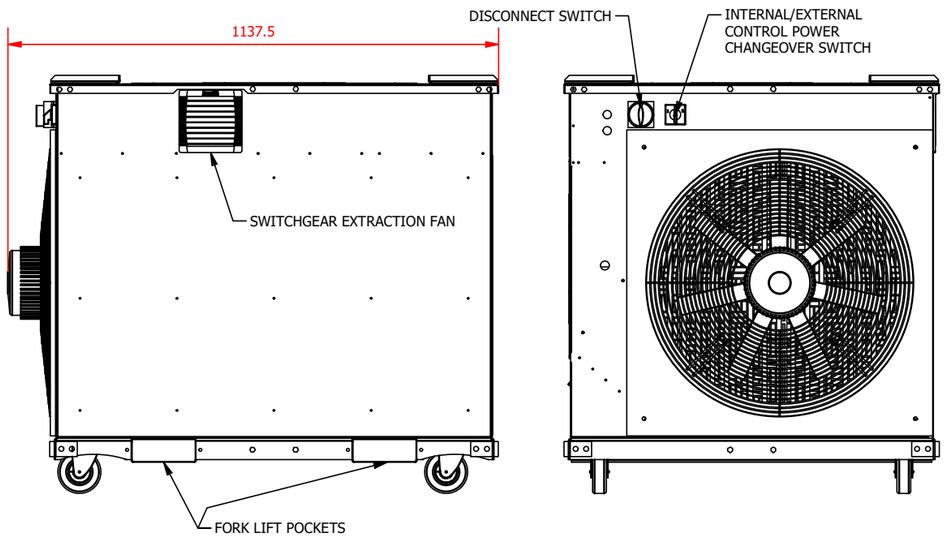

Figure A-2 **3020 back and side views**

3020 - Installation Diagrams

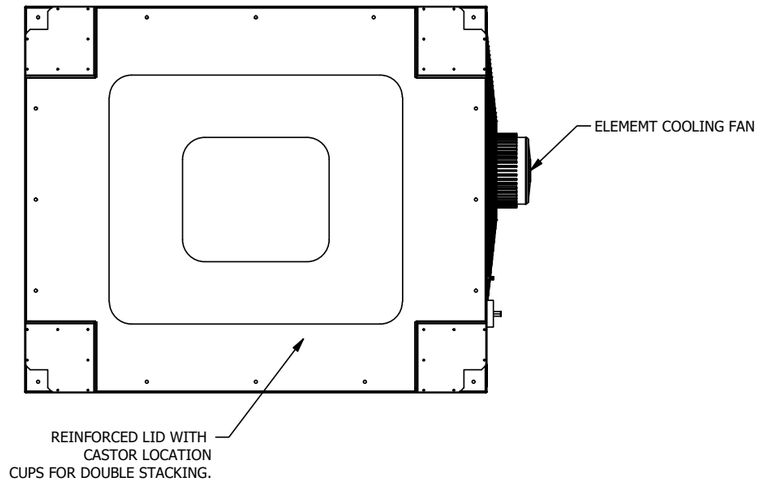

Figure A-3 3020 plan view

3040 - Installation Diagrams

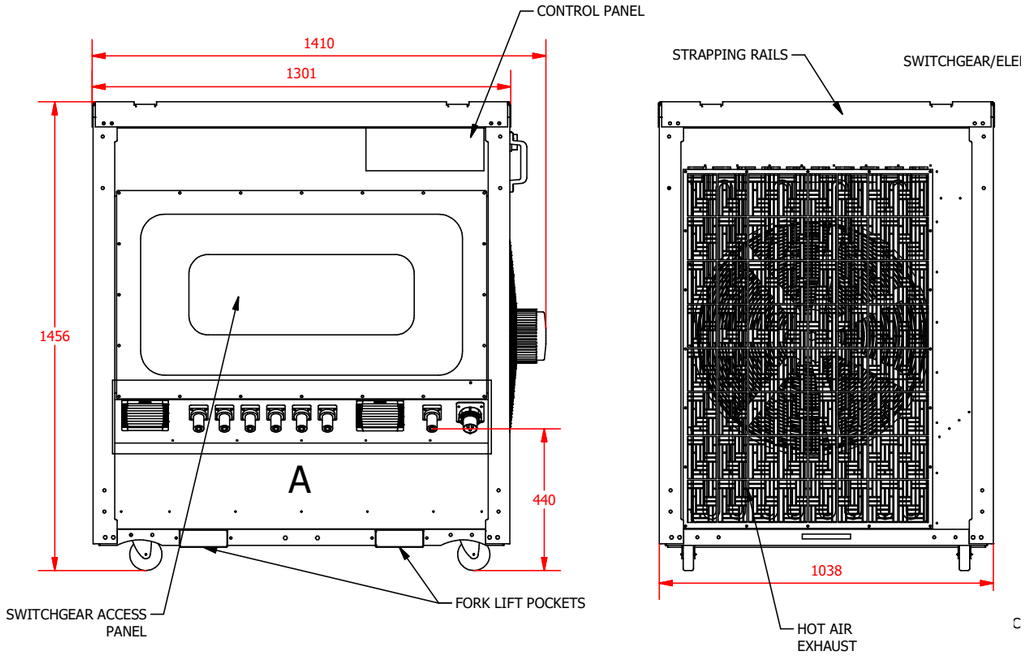

Figure A-7 3040 front view and side view

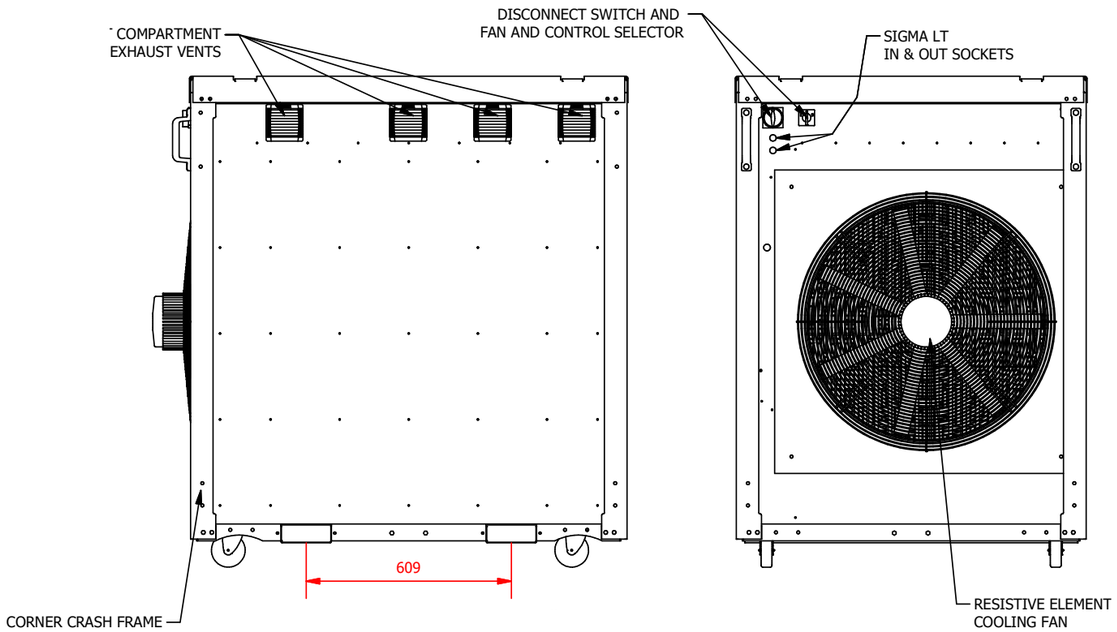

Figure A-8 3040 back and side views

3040 - Installation Diagrams

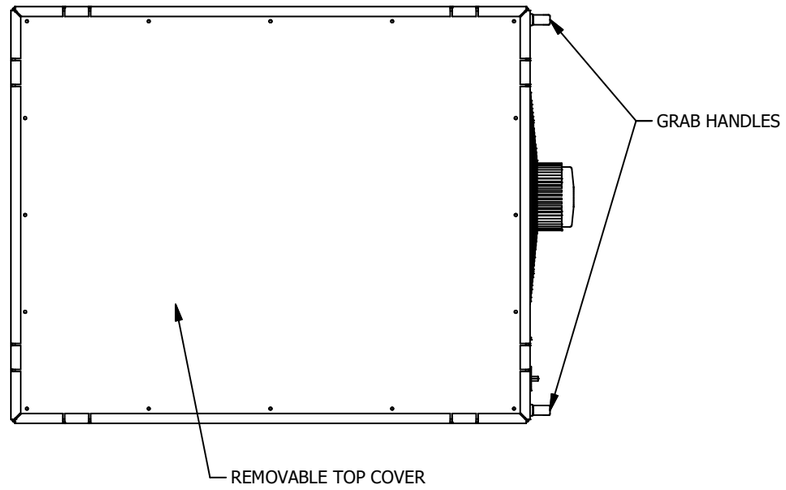

Figure A-9 3040 plan view

3010R - Installation Diagrams

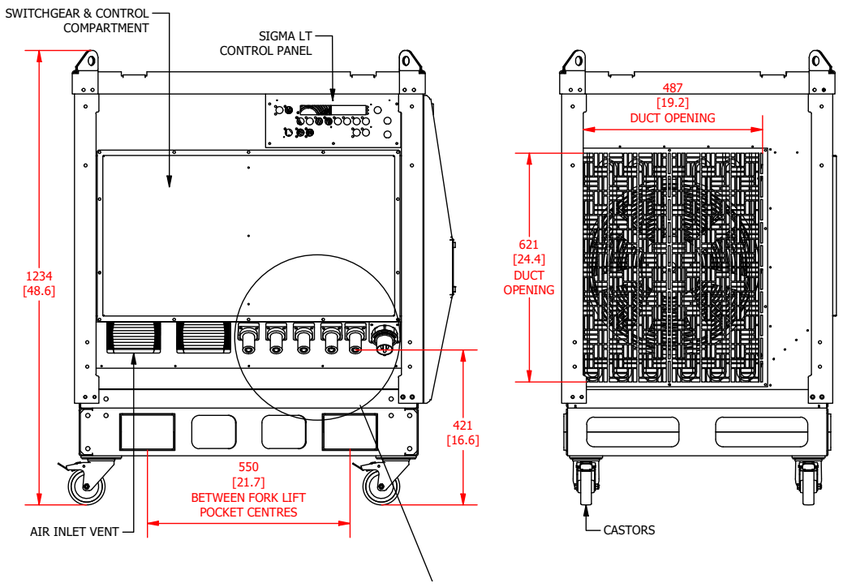

Figure A-10 3010R front view and side view

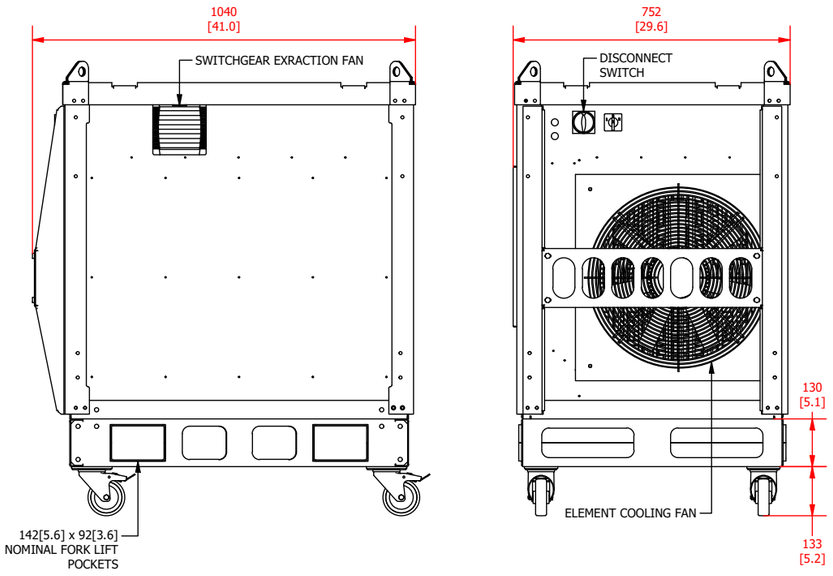

Figure A-11 3010R back and side views

3010R - Installation Diagrams

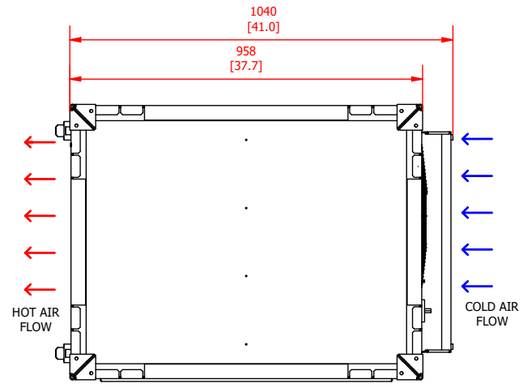

Figure A-12 3010R plan view

3020R - Installation Diagrams

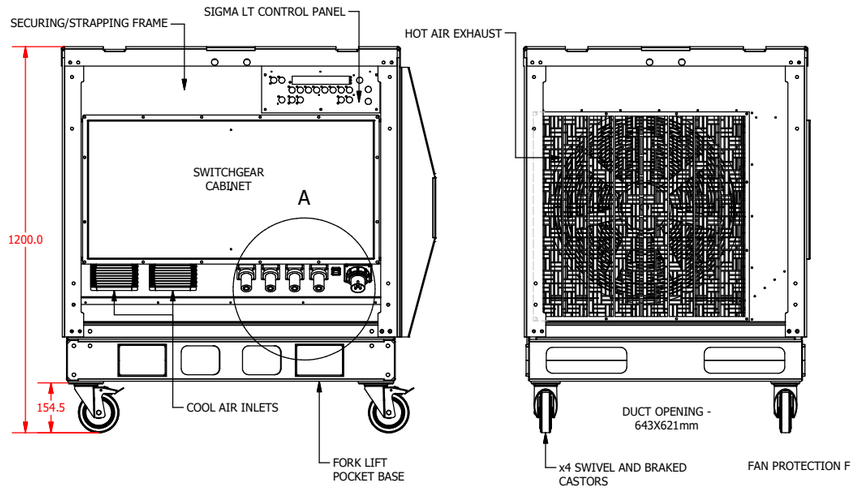

Figure A-13 3020R front view and side view

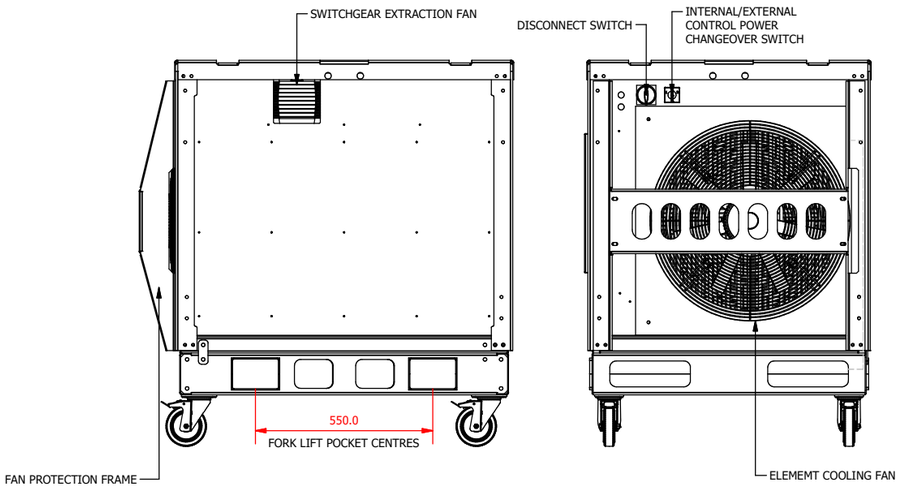

Figure A-14 3020R back and side views

3020R - Installation Diagrams

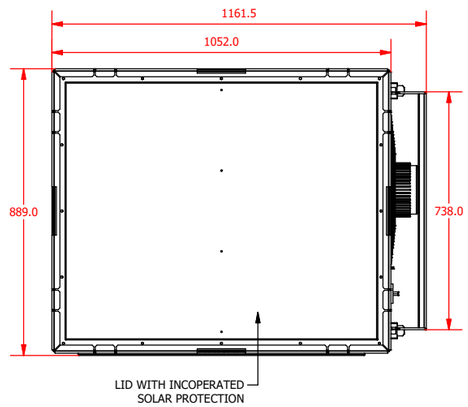

Figure A-15 3020R plan view

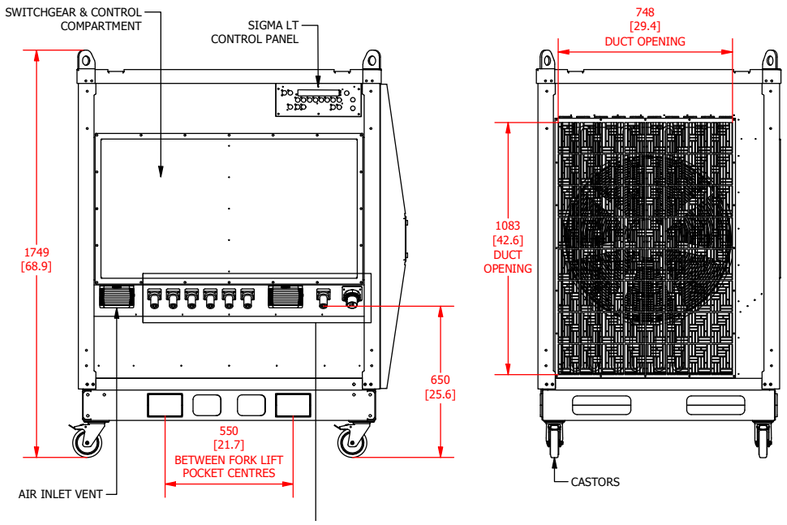

Figure A-16 3040R front view and side view

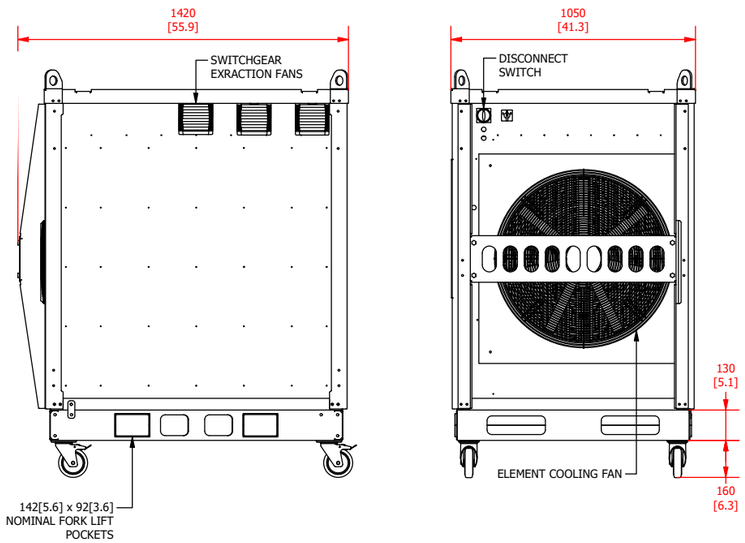

Figure A-17 3040R back and side views

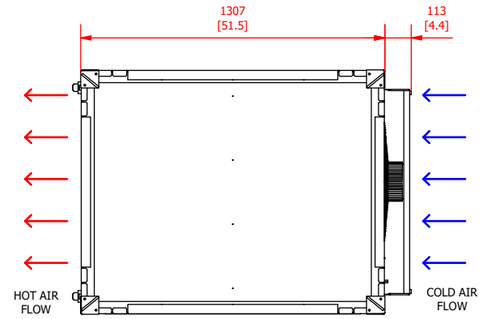

Figure A-18 3040R plan view

Certificate of Conformity UK CA

UK Declaration of Conformity

Product:	Sigma LT Load Bank
Name of Manufacturer:	N J Froment & Company Limited, Easton-on-the-Hill, STAMFORD, PE9 3NP, United Kingdom
Telephone	+44 (0) 1780 920 100
e-mail	support@avtronpower.com
Website	www.avtronpower.com
Country of Origin	United Kingdom

This declaration of conformity is issued under our sole responsibility of the manufacturer

Object of Declaration:	Sigma LT Load Bank Types:	3010 Series 3020 Series 3040 Series

The object of the declaration described above is in conformity with the relevant UK Statutory Instruments and their amendments:

2016 No 1091	The Electromagnetic Compatibility Regulations 2016
2016 No. 1101	The Electrical Equipment (Safety) Regulations 2016
2012 No 3032	The Restriction of the Use of Hazardous Substances in Electrical and Electronic Equipment Regulations 2012
2019 No 758	UK REACH

References to the relevant harmonised standards used or references to the other technical specifications in relation to which conformity is declared:

BS EN 60204-1:2018	Safety of Machinery. Electrical Equipment of Machines.
BS EN 55011:2009 (+A1)	Radio-frequency disturbance characteristics
IEC 61000-4-2:2008	EMC - Electrostatic discharge immunity test
IEC 61000-4-3:2010	EMC - Radiated immunity test
IEC 61000-4-4:2012	EMC - Electrical Fast Transient/Burst immunity test
IEC 61000-4-5:2005	EMC - Surge immunity test
IEC 61000-4-6:2008	EMC - Immunity to conducted disturbances
IEC 61000-4-8:2009	EMC - Power frequency magnetic field immunity test

Basis of self attestation:	**Quality Assurance to BS EN ISO 9001:2015** Registered Firm Certification No: FM 38927
Signed for and behalf of:	N J Froment & Company Limited
Place of Issue:	Easton-on-the-Hill, STAMFORD, UK
Date of Issue:	1st December 2022
Name & Position:	J. Clarke Director
Signature:	

One copy of this declaration accompanies each load bank, for customer retention

Certificate of Conformity CE

EU Declaration of Conformity

Product:	Sigma LT Load Bank
Name of Manufacturer:	N J Froment & Company Limited, Easton-on-the-Hill, STAMFORD, PE9 3NP, United Kingdom
Telephone	+44 (0) 1780 920 100
e-mail	support@avtronpower.com
Website	www.avtronpower.com
Country of Origin	United Kingdom

This declaration of conformity is issued under our sole responsibility of the manufacturer

Object of Declaration:	Sigma LT Load Bank Types:	3010 Series 3020 Series 3040 Series

The object of the declaration described above is in conformity with the relevant Union harmonisation legislation:

2014/30/EC	Electromagnetic Compatibility Directive
2014/35/EU	Low Voltage Directive
EU 2015/863	RoHS Directive – EEE Category 9.
EC 1907/2006	REACH

References to the relevant harmonised standards used or references to the other technical specifications in relation to which conformity is declared:

BS EN 60204-1:2018	Safety of Machinery. Electrical Equipment of Machines.
BS EN 55011:2009 (+A1)	Radio-frequency disturbance characteristics
IEC 61000-4-2:2008	EMC - Electrostatic discharge immunity test
IEC 61000-4-3:2010	EMC - Radiated immunity test
IEC 61000-4-4:2012	EMC - Electrical Fast Transient/Burst immunity test
IEC 61000-4-5:2005	EMC - Surge immunity test
IEC 61000-4-6:2008	EMC - Immunity to conducted disturbances
IEC 61000-4-8:2009	EMC - Power frequency magnetic field immunity test

Basis of self attestation:	**Quality Assurance to BS EN ISO 9001:2015** Registered Firm Certification No: FM 38927
Signed for and behalf of:	N J Froment & Company Limited
Place of Issue:	Easton-on-the-Hill, STAMFORD, UK
Date of Issue:	1st December 2022
Name & Position:	J. Clarke Director
Signature:	

One copy of this declaration accompanies each load bank, for customer retention

Electromagnetic Compatibility

This equipment has been designed and constructed to comply with the European Community Directive 89/336/EEC. To ensure that the requirements of the Directive and related standards are satisfied it is essential that the equipment is used as intended and in full accordance with the operating instructions.

Immunity to external interference (EN 61000: Part 6)

- This equipment will not suffer permanent damage, or become dangerous or unsafe as a result of electromagnetic interference at the levels set in the standards. Normally it will continue to operate as intended. Electrostatic discharges or breaks in the power supply may cause the equipment to shut down until it is manually re-set and re-started.
- Exposure to higher levels of electromagnetic disturbance, above the prescribed limits (for example by the operation of a hand-held transmitter close to the remote controller) may result in out-of-tolerance readings on the instrumentation.

Electromagnetic emissions (EN 61000: Part 6)

- Electromagnetic disturbances generated by this equipment do not exceed the prescribed levels that could cause interference to radio, telecommunications or television reception apparatus. There will be no interference provided the reception equipment itself is constructed and used in accordance with the applicable standards, and its antenna is located more than 10 metres away.
- If highly susceptible apparatus is used nearby, particularly if its faulty operation could cause danger, then you must take additional measures to minimise the risks.
- This test equipment is intended to cause controlled changes in the load on an electrical power supply. Such tests may result in disturbances in the Supply-on-Test that are outside prescribed limits. If susceptible apparatus is connected to the Supply-on-Test, particularly if its faulty operation could cause danger, then it should be switched off, or disconnected, during the tests.

Useful Equations

Apparent Power (kVA)

$$kVA = \sqrt{kW^2 + kVAr^2}$$

$$kVA = \frac{V \times I \times \sqrt{3}}{1000}$$

$$kVA = \frac{kW}{pf}$$

$$kVA = \frac{kVAr}{\sqrt{1 - pf^2}}$$

Resistive Power (kW)

$$kW = kVA \times pf$$

$$kW = \frac{V \times I \times pf \times \sqrt{3}}{1000}$$

$$kW = \sqrt{kVA^2 - kVAr^2}$$

Reactive Power (kVAr)

$$kVAr = kVA \times \sqrt{1 - pf^2}$$

$$kVAr = \frac{V \times I \times \sqrt{1 - pf^2} \times \sqrt{3}}{1000}$$

$$kVAr = \sqrt{kVA^2 - kW^2}$$

Power Factor (pf)

$$pf = \cos\phi = \frac{kW}{kVA}$$

Current (A)

$$I = \frac{kVA \times 1000}{V \times \sqrt{3}}$$

$$I = \frac{kW \times 1000}{V \times pf \times \sqrt{3}}$$

De-rate from Nominal Voltage and Frequency

$$kW = \left(\frac{V}{V_{nom}}\right)^2 \times kW_{nom}$$

$$kVAr = \left(\frac{V}{V_{nom}}\right)^2 \times \frac{F_{nom}}{F} \times kVAr_{nom}$$

Note: All voltages are phase-to-phase values and assume a 3-phase system.

Avtron Power Solutions

6255 Halle Drive
Cleveland, OH 44125, USA
Tel: 216 573 7600
LBsales@avtronpower.com

Cliffe Road, Easton-on-the-Hill
Stamford, PE9 3NP, United Kingdom
Tel: +44 (0) 1780 920 100
froment.sales@avtronpower.com

www.avtronpower.com